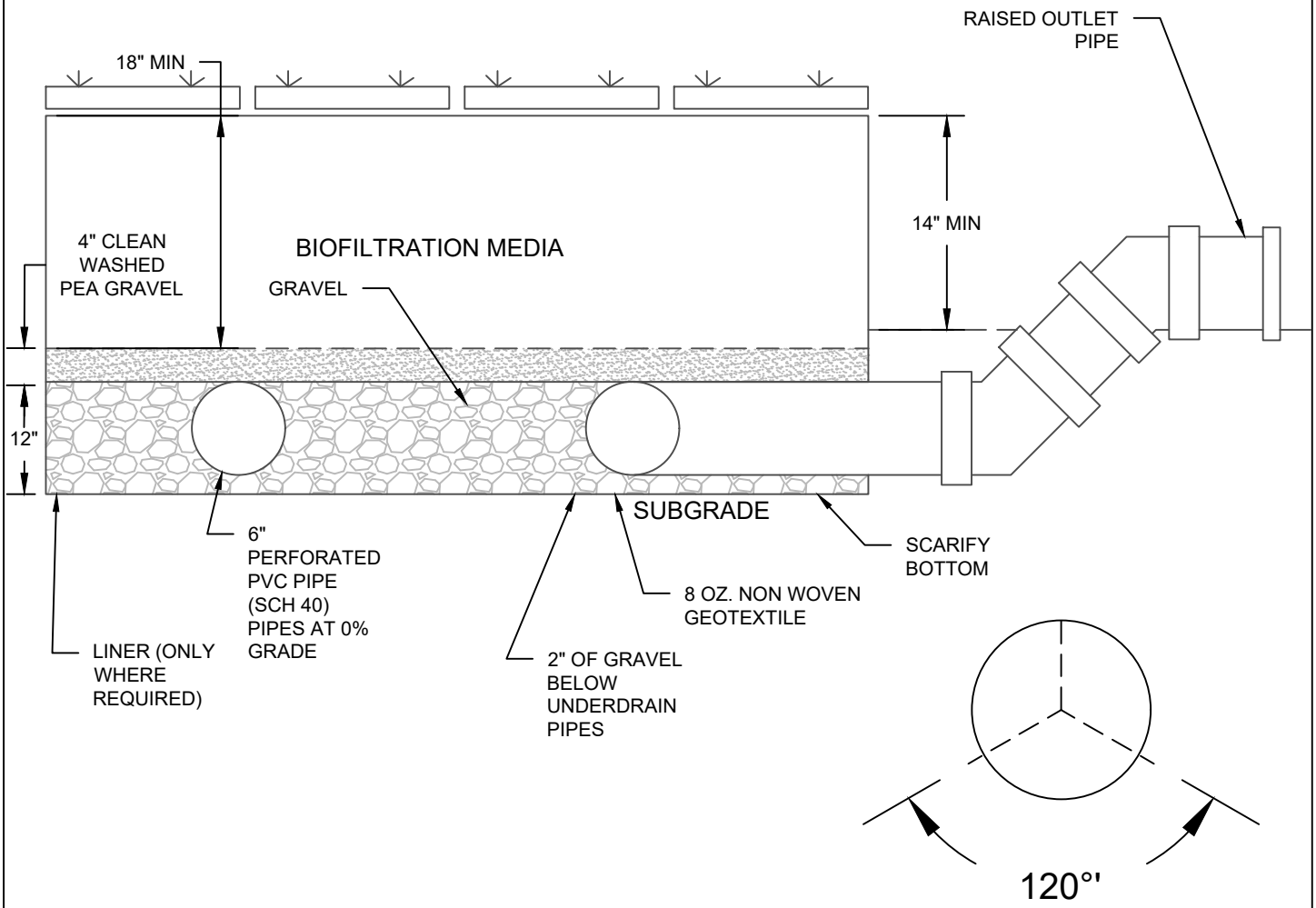

PERFORATION LAYOUT

6" PVC WITH $\frac{3}{8}$" OPENING.
TURN PERFORATIONS DOWN

LOWER COLORADO RIVER AUTHORITY		
BIOFILTRATION RAISED OUTLET DETAIL	DATE: 03-2023	SHEET: 1 OF 1